Leviat®
A CRH COMPANY

HALFEN HZA DYNAGRIP
Serrated cast-in channels

European Technical Assessment ETA-20/1081

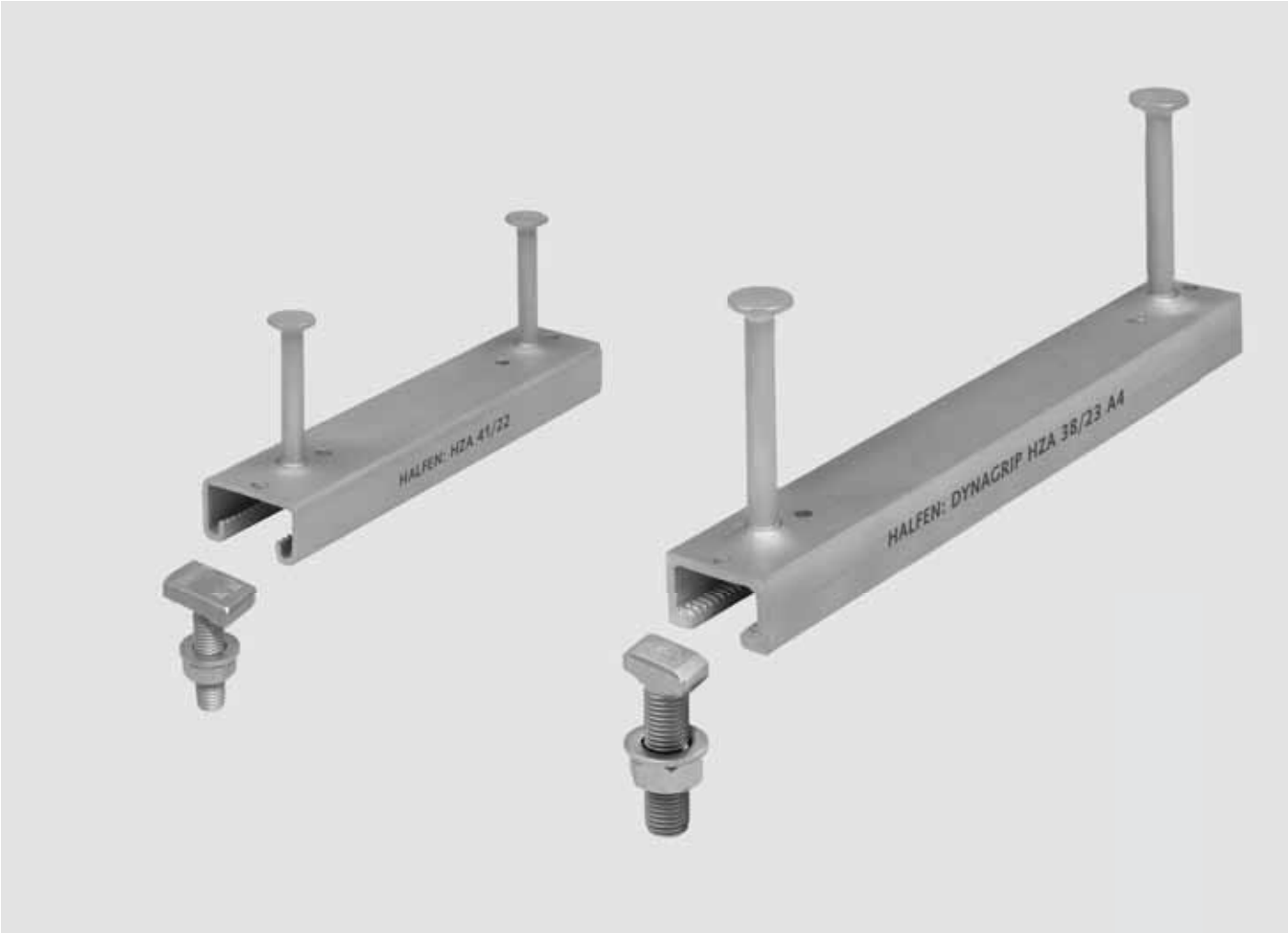

Leviat, the home of

HALFEN

HALFEN HZA DYNAGRIP Serrated anchor channels

General note

Leviat is committed to minimising and, wherever possible, eliminating construction risk.

This certificate is an important indicator of our product's safety, reliability and quality, providing the industry with additional confidence in its suitability. It confirms that this product has passed specific performance and quality assurance criteria.

This assessment only applies to original HALFEN products, manufactured by Leviat. The specifications in the following pages are not transferable to other manufacturers' products. Inappropriate use of this information carries risk.

Deutsches Institut für Bautechnik DIBt

Member of EOTA
www.eota.eu

Approval body for construction products and types of construction

Bautechnisches Prüfamt

An institution established by the Federal and Laender Governments

Designated according to Article 29 of Regulation (EU) No 305/2011 and member of EOTA (European Organisation for Technical Assessment)

European Technical Assessment

ETA-20/1081 of 15 July 2022

English translation prepared by DIBt - Original version in German language

General Part

Technical Assessment Body issuing the European Technical Assessment:	Deutsches Institut für Bautechnik
Trade name of the construction product	HALFEN Serrated Anchor Channels HZA
Product family to which the construction product belongs	Anchor channels
Manufacturer	Leviat GmbH Liebigstraße 14 40764 Langenfeld DEUTSCHLAND
Manufacturing plant	Leviat Werke Leviat Manufacturing Plants
This European Technical Assessment contains	31 pages including 3 annexes which form an integral part of this assessment
This European Technical Assessment is issued in accordance with Regulation (EU) No 305/2011, on the basis of	EAD 330008-03-0601-V01, Edition 06/2022
This version replaces	ETA-20/1081 issued on 14 April 2021

The European Technical Assessment is issued by the Technical Assessment Body in its official language. Translations of this European Technical Assessment in other languages shall fully correspond to the original issued document and shall be identified as such.

Communication of this European Technical Assessment, including transmission by electronic means, shall be in full. However, partial reproduction may only be made with the written consent of the issuing Technical Assessment Body. Any partial reproduction shall be identified as such.

This European Technical Assessment may be withdrawn by the issuing Technical Assessment Body, in particular pursuant to information by the Commission in accordance with Article 25(3) of Regulation (EU) No 305/2011.

Specific Part

1 Technical description of the product

The HALFEN Serrated Anchor Channels HZA is a system consisting of a C-shaped serrated channel profile of steel and stainless steel and at least two metal anchors non-detachably fixed on the channel back and HALFEN serrated channel bolts.

The anchor channel is embedded surface-flush in the concrete. HALFEN serrated channel bolts with appropriate hexagon nuts and washers are fixed to the channel.

The product description is given in Annex A.

2 Specification of the intended use in accordance with the applicable European Assessment Document

The performances given in Section 3 are only valid if the anchor channel is used in compliance with the specifications and conditions given in Annex B.

The verifications and assessment methods on which this European Technical Assessment is based lead to the assumption of a working life of the anchor channel of at least 50 years. The indications given on the working life cannot be interpreted as a guarantee given by the producer, but are to be regarded only as a means for choosing the right products in relation to the expected economically reasonable working life of the works.

3 Performance of the product and references to the methods used for its assessment

3.1 Mechanical resistance and stability (BWR 1)

Essential characteristic	Performance
Characteristic resistance under tension load (static and quasi-static loading)	
- Resistance to steel failure of anchors	$N_{Rk,s,a}$ see Annex C1
- Resistance to steel failure of the connection between anchors and channel	$N_{Rk,s,c}$ see Annex C1
- Resistance to steel failure of channel lips and subsequently pull-out of channel bolt	$N^0_{Rk,s,l}$; $s_{l,N}$ see Annex C1
- Resistance to steel failure of channel bolt	$N_{Rk,s}$ see Annex C2
- Resistance to steel failure by exceeding the bending strength of the channel	s_{max} see Annex A7 $M_{Rk,s,flex}$ see Annex C1
- Maximum installation torque to avoid damage during installation	$T_{inst,g}$; $T_{inst,s}$ see Annex B4
- Resistance to pull-out failure of the anchor	$N_{Rk,p}$ see Annex C3
- Resistance to concrete cone failure	h_{ef} see Annex B3 $k_{cr,N}$; $k_{ucr,N}$ see Annex C3
- Minimum edge distances, spacing and member thickness to avoid concrete splitting during installation	s_{min} see Annex A7 c_{min} ; h_{min} see Annex B3
- Characteristic edge distance and spacing to avoid splitting of concrete under load	$s_{cr,sp}$; $c_{cr,sp}$ see Annex C3
- Resistance to blowout failure - bearing area of anchor head	A_h see Annex A6

Essential characteristic	**Performance**
Characteristic resistance under shear load (static and quasi-static loading)	
- Resistance to steel failure of channel bolt under shear loading without lever arm	$V_{Rk,s}$ see Annex C8
- Resistance to steel failure by bending of the channel bolt under shear load with lever arm	$M^0_{Rk,s}$ see Annex C8
- Resistance to steel failure of channel lips, steel failure of connection between anchor and channel and steel failure of anchor (shear load in transverse direction)	$V^0_{Rk,s,l,y}$; $s_{l,V}$; $V_{Rk,s,c,y}$; $V_{Rk,s,a,y}$ see Annex C5
- Resistance to steel failure of connection between channel lips and channel bolt (shear load in longitudinal channel axis)	$V_{Rk,s,l,x}$ see Annex C6
- Factor for sensitivity to installation (longitudinal shear)	γ_{inst} see Annex C6
- Resistance to steel failure of the anchor (longitudinal shear)	$V_{Rk,s,a,x}$ see Annex C5
- Resistance to steel failure of connection between anchor and channel (longitudinal shear)	$V_{Rk,s,c,x}$ see Annex C5
- Resistance to concrete pry-out failure	k_8 see Annex C7
- Resistance to concrete edge failure	$k_{cr,V}$; $k_{ucr,V}$ see Annex C7
Characteristic resistance under combined tension and shear load (static and quasi-static load)	
- Resistance to steel failure of the anchor channel	k_{13} ; k_{14} see Annex C8
Characteristic resistance under fatigue tension loading	
- Fatigue resistance to steel failure of the whole system (continuous or tri-linear function, test method A1, A2)	No Performance assessed
- Fatigue limit resistance to steel failure of the whole system (test method B)	No Performance assessed
- Fatigue resistance to steel failure of the whole system (linearized function, test method C)	$\Delta N_{Rk,s,lo,n}$; $N_{lok,s,n}$ (n = 10^4 to n = ∞) see Annex C9
- Fatigue resistance to concrete related failure (exponential function, test method A1, A2)	No Performance assessed
- Fatigue limit resistance to concrete related failure (test method B)	No Performance assessed
- Fatigue resistance to concrete related failure (linearized function, test method C)	$\Delta N_{Rk,c,E,n}$; $\Delta N_{Rk,p,E,n}$ (n = 10^4 to n = ∞) see Annex C10

Essential characteristic	Performance
Displacements (static and quasi-static load)	δ_{N0} ; $\delta_{N\infty}$ see Annex C4 $\delta_{V,y,0}$; $\delta_{V,y,\infty}$; $\delta_{V,x,0}$; $\delta_{V,x,\infty}$ see Annex C7

3.2 Safety in case of fire (BWR 2)

Essential characteristic	Performance
Reaction to fire	Class A1
Resistance to fire	No Performance assessed

3.3 Aspects of durability linked with the Basic Works Requirements

Essential characteristic	Performance
Durability	See Annex B1

4 Assessment and verification of constancy of performance (AVCP) system applied, with reference to its legal base

In accordance with EAD No. 330008-03-0601-V01, the applicable European legal act is: [2000/273/EC].

The system to be applied is: 1

5 Technical details necessary for the implementation of the AVCP system, as provided for in the applicable European Assessment Document

Technical details necessary for the implementation of the AVCP system are laid down in the control plan deposited with Deutsches Institut für Bautechnik.

Issued in Berlin on 15 July 2022 by Deutsches Institut für Bautechnik

Dipl.-Ing. Beatrix Wittstock
Head of Section

beglaubigt:
Müller

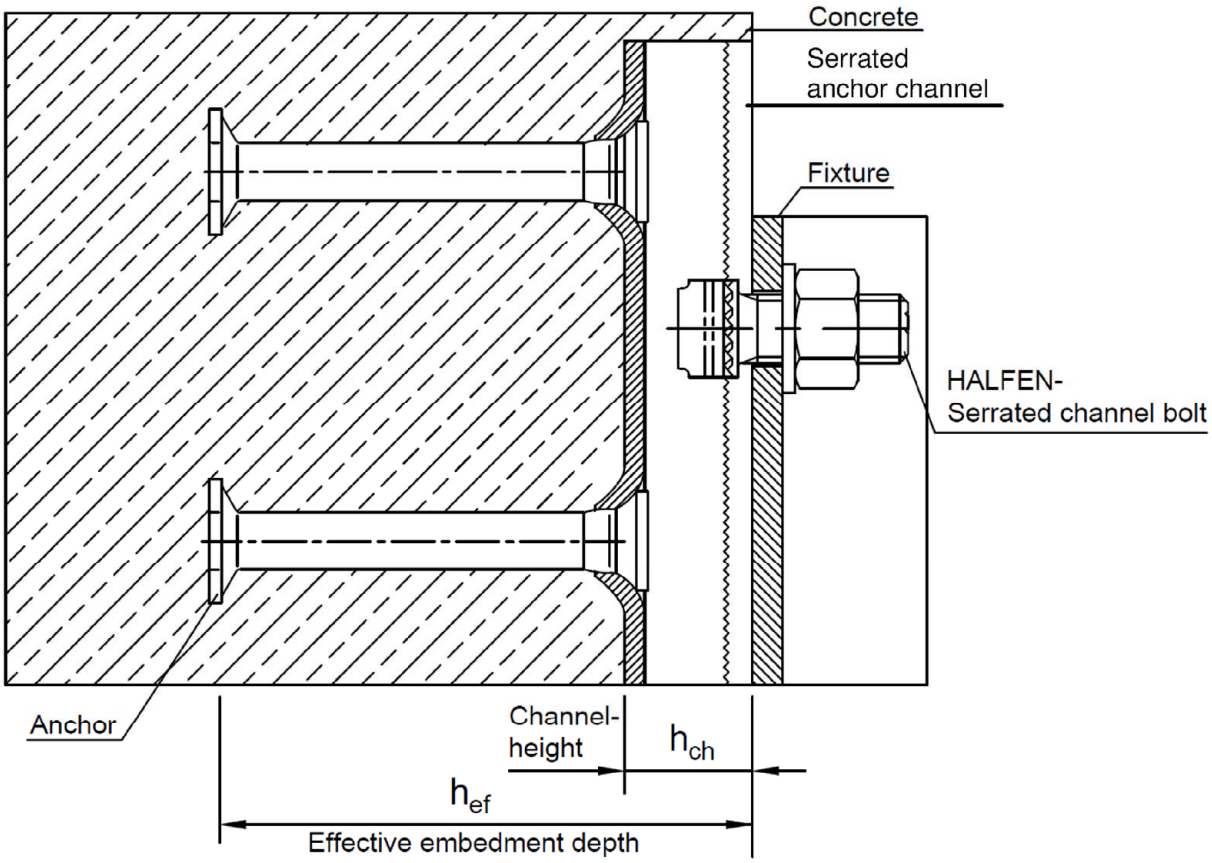

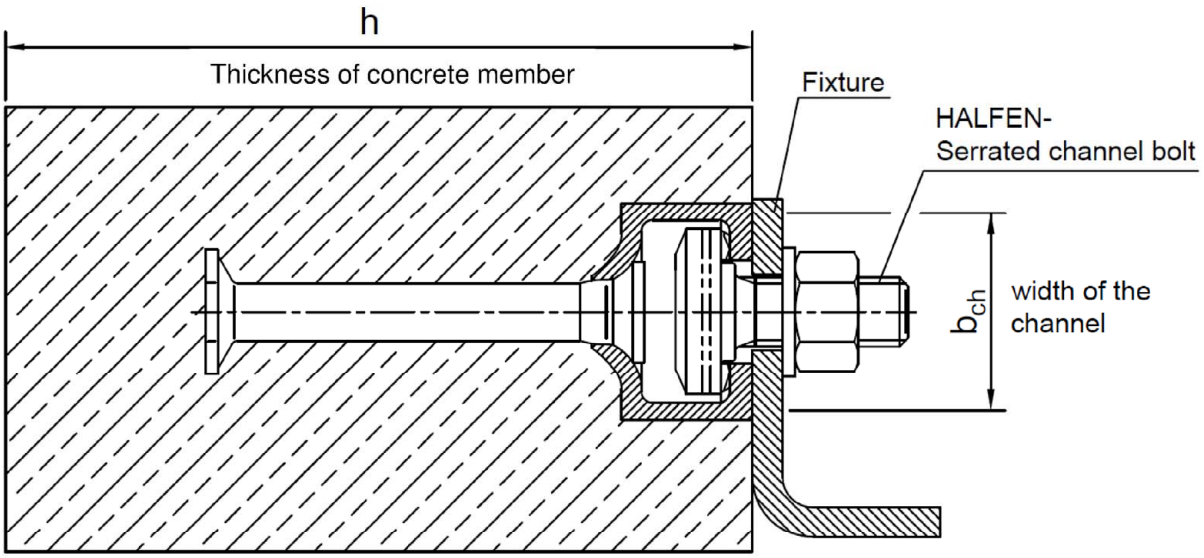

HALFEN Serrated Anchor Channels HZA	Annex A1
Product description Installed condition	

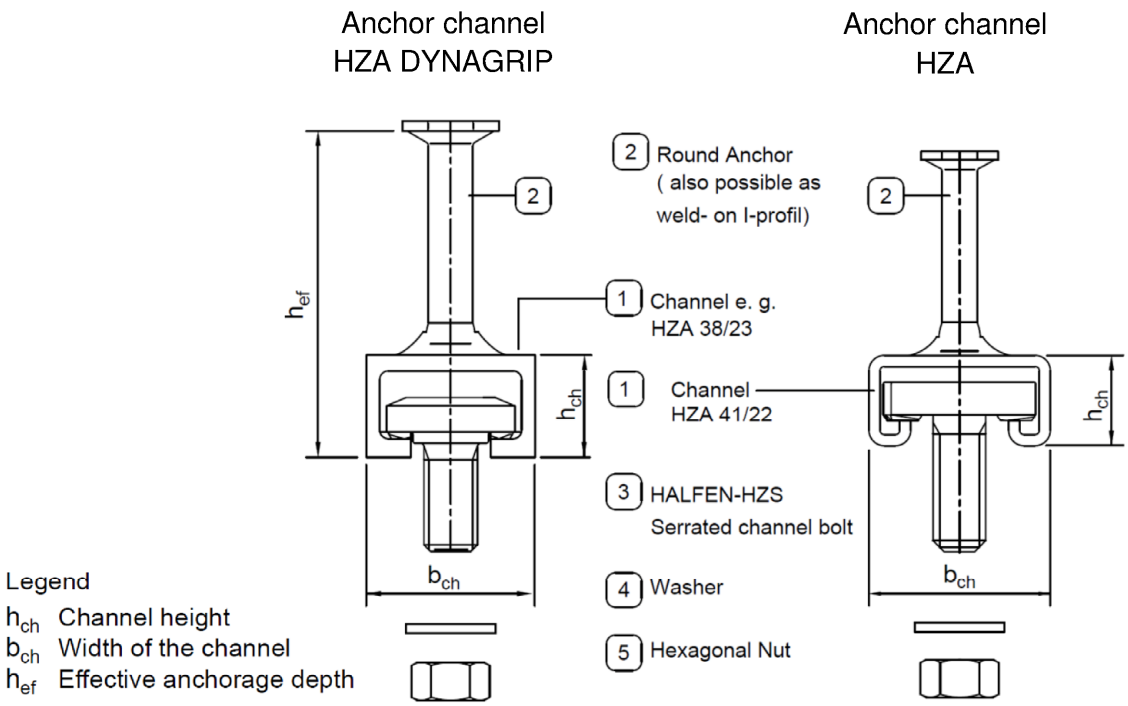

Marking of the HALFEN serrated anchor channel e.g.: HZA 38/23 A4		Marking of the HALFEN serrated channel bolts e.g.: HALFEN 8.8	
		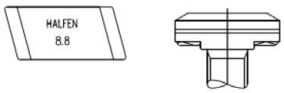	
a) Stamped on inner side of channel back	b) Printed on channel web		
H or HALFEN	Identifying mark of producer	H or HALFEN	Identifying mark of producer
ZA	Type of anchor channel	8.8	Strength grade
38/23	Size		
A4	Material		
Material of serrated channel:		**Material of serrated channel bolts:**	
Carbon steel		Carbon steel	
No marking for	1.0038/1.0044/1.0045	No marking	
SV	1.0242+Z/1.0529+Z	Stainless steel	
Stainless steel		A2	1.4301/1.4307/1.4567/1.4541
A2	1.4301/1.4307/1.4567/1.4541	A4	1.4401/1.4404/1.4571/1.4578
A4	1.4401/1.4404/1.4571	L4	1.4362
L4, DX	1.4062/1.4162/1.4362	F4, FA	1.4462
F4, FA	1.4462	HCR	1.4529/1.4547
HCR	1.4529/1.4547	**Strength grade of the serrated channel bolts:**	
		Carbon steel	
		8.8	Strength grade 8.8
		Stainless steel	
		50, 70	Strength grade 50, 70

HALFEN Serrated Anchor Channels HZA	Annex A2
Product description Marking and materials	

Table A1: Materials and intended use

Item no.	Specification	Intended use	
		1	2
		Dry internal conditions	**Internal conditions with usual humidity**
		Anchor channels may only be used in structures subject to dry internal conditions	Anchor channels may also be used in structures subject to internal conditions with usual humidity. For examples see use conditions in Annex B1
		Materials	
①	Channel profile	**Carbon steel** 1.0038 (A), 1.0044 (A), 1.0045 (A) 1.0976 (D) hot-dip galv. ≥ 55 µm acc. to (N) 1.0242+Z (U), 1.0529+Z (U) hot-dip galv. ≥ 15 µm	**Carbon steel** 1.0038 (A), 1.0044 (A), 1.0045(A) 1.0976 (D) hot-dip galv. ≥ 55 µm acc. to (N) **Stainless steel** [5)] 1.4301 (G), 1.4307 (G), 1.4567 (G) 1.4541 (G)
②	Anchor	**Carbon steel** 1.0038 (A), 1.0214 (B), 1.0213 (B) 1.1132 (E), 1.1122 (E), 1.5525 (I) 1.5535 (I), 1.5523 (H), 1.0045 (A) 1.0401 (C) hot-dip galv. ≥ 55 µm acc. to (N)	**Carbon steel** 1.0038 (A), 1.0214 (B), 1.0213 (B) 1.1132 (E), 1.1122 (E), 1.5525 (I) 1.5535 (I), 1.5523 (H), 1.0045 (A) 1.0401 (C) hot-dip galv. ≥ 55 µm acc. to (N) **Stainless steel** [5)] 1.4301 (G), 1.4307 (G) 1.4567 (G), 1.4541 (G)
③	HALFEN serrated channel bolts	**Carbon steel** strength grade 8.8 (J) hot-dip galv. ≥ 50 µm acc. to (P) [1)]	**Carbon steel** strength grade 8.8 (J) hot-dip galv. ≥ 50 µm acc. to (P) [1)] **Stainless steel** [5)] strength grade 50,70 (K) 1.4301 (G), 1.4307 (G) 1.4567 (G), 1.4541 (G)
④	Washer [3)] (R) and (S) production class A, 200 HV	**Carbon steel** EN 10025:2005 electroplated ≥ 5 µm acc. to (O)	**Carbon steel** EN 10025:2005 hot-dip galv. ≥ 50 µm acc. to (P) [1)] **Stainless steel** [5)] steel grade A2, A3 (K)
⑤	Hexagonal nuts (T)	**Carbon steel** strength grade 5/8 (L) electroplated ≥ 5 µm acc. to (O)	**Carbon steel** strength grade 5/8 (L) hot-dip galv. ≥ 50 µm acc. to (P) [1)] **Stainless steel** [5)] strength grade 70, 80 (M) steel grade A2, A3 (M)

Table A1 (continued): Materials and intended use

Item no.	Specification	Intended use		
		3	4	5
		according EN 1993-1-4:2006+A1:2015, Tab. A.2		
		For CRC III	For CRC IV	For CRC V
		Materials		
①	Channel profile	**Stainless steel** 1.4401 (G), 1.4404 (G) 1.4571 (G), 1.4362 (G) 1.4062 (F), 1.4162 (F)	**Stainless steel** 1.4462[2)] (G)	**Stainless steel** 1.4529 (G), 1.4547 (G)
②	Anchor	**Stainless steel** 1.4401 (G), 1.4404 (G) 1.4571 (G), 1.4362 (G) 1.4578 (G) **Carbon steel** [4)] 1.0038 (A)	**Stainless steel** 1.4462[2)] (G)	**Stainless steel** 1.4529 (G), 1.4547 (G)
③	HALFEN serrated channel bolts	**Stainless steel** strength grade 50,70 (K) 1.4401 (G), 1.4404 (G) 1.4571 (G), 1.4362 (G) 1.4578 (G)	**Stainless steel** strength grade 50,70 (K) 1.4462[2)] (G)	**Stainless steel** strength grade 50,70 (K) 1.4529 (G), 1.4547 (G)
④	Washer [3)] (R) and (S) production class A, 200 HV	**Stainless steel** steel grade A4, A5 (K)	**Stainless steel** 1.4462[2)] (G)	**Stainless steel** 1.4529 (G), 1.4547 (G)
⑤	Hexagonal nuts (T)	**Stainless steel** strength grade 70, 80 (M) steel grade A4, A5 (M)	**Stainless steel** strength grade 70, 80 (M) 1.4462[2)] (G)	**Stainless steel** strength grade 70, 80 (M) 1.4529 (G), 1.4547 (G)

A - EN 10025-2:2004	F - EN 10088-2:2014	K - EN ISO 3506-1:2009	P - EN ISO 10684:2004
B - EN 10263-2:2017	G - EN 10088-3:2014	L - EN ISO 898-2:2012	R - EN ISO 7089:2000
C - EN 10277-2:2008	H - EN 10269:2013	M - EN ISO 3506-2:2009	S - EN ISO 7093-1:2000
D - EN 10149-2:2013	I - EN 10263-4:2017	N - EN ISO 1461:2009	T - EN ISO 4032:2012
E - EN 10263-3:2017	J - EN ISO 898-1:2013	O - EN ISO 4042:1999	U - EN 10346:2015

[1)] or electroplated with special coating ≥ 12 µm

[2)] 1.4462 not applicable for indoor swimming pools

[3)] not included in scope of delivery

[4)] only for weld-on anchors with sufficient concrete cover acc. to EN 1992-1-1:2004 + AC:2010

[5)] stainless steel anchors only in combination with stainless steel channel profiles, channel bolts, washers and nuts

Fig. 1

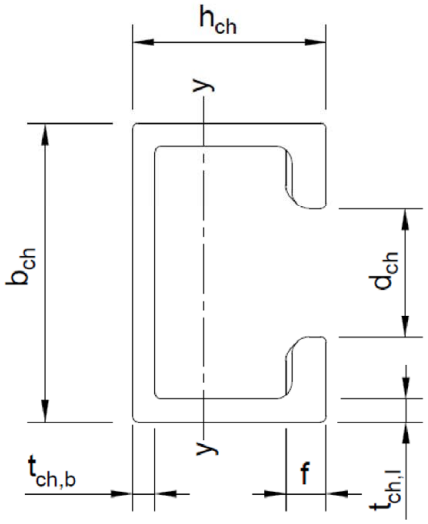

Fig. 2

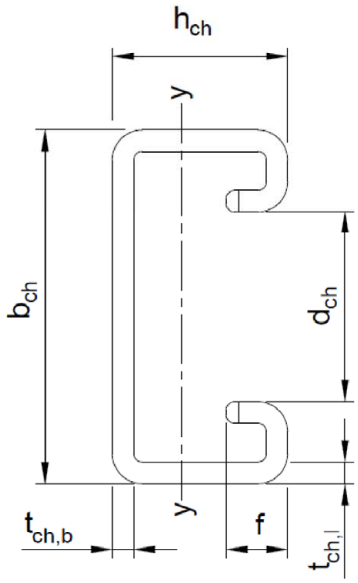

Table A2: Profile dimensions (steel and stainless steel)

Anchor channel HZA	Material		Dimensions						
			b_{ch}	h_{ch}	$t_{ch,b}$	$t_{ch,l}$	d_{ch}	f	I_y
			[mm]						[mm⁴]
29/20	Carbon steel	Fig. 1	29,0	20,0	2,5	2,5	14,0	5,0	10.200
38/23	Carbon steel & stainless steel		38,0	23,0	3,5	3,0	18,0	5,5	21.100
41/27	Carbon steel		40,0	27,0	4,2	4,0	18,0	7,0	39.000
53/34	Carbon steel & stainless steel		52,5	34,0	4,0	4,0	22,5	7,5	92.600
64/44	Carbon steel & stainless steel		64,0	44,0	4,5	5,0	26,0	10,0	240.300
41/22	Carbon steel & stainless steel	Fig. 2	41,3	20,7	2,5	2,5	22,3	7,2	12.600

HALFEN Serrated Anchor Channels HZA	Annex A5
Product description Profile dimensions	

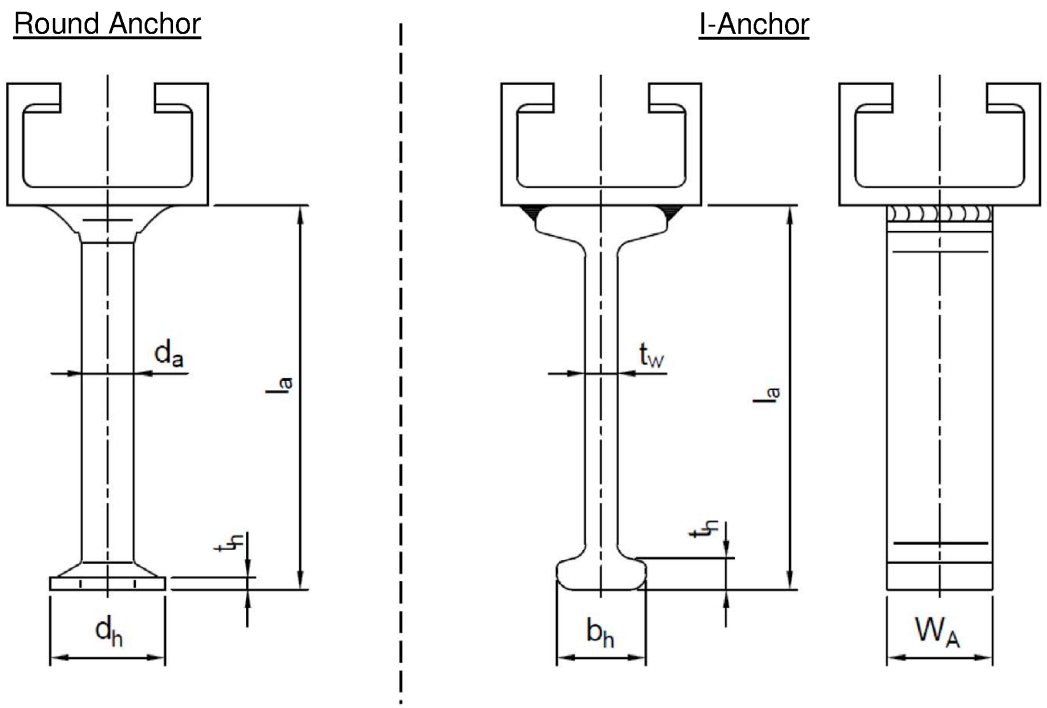

Table A3: Dimensions of anchors (Round Anchor and I-Anchor)

Anchor channel HZA	Round Anchor					I-Anchor					
	min l_a	d_a	d_h	t_h	A_h	min l_a	t_w	b_h	t_h	w_A	A_h
	[mm]				[mm²]	[mm]					[mm²]
29/20	64,0	8	16	1,9	151	69	5	18	3,5	12-20	156
38/23	73,0	10	20	2,2	236	128	6	17	5	20-30	220
41/27	124,0	12	25	2,7	378	128	6	17	5	25-35	275
53/34	123,7	12	25	2,7	378	128	6	17	5	30-40	330
64/44	–[1)]	–[1)]	–[1)]	–[1)]	–[1)]	140	7,1	20	6	41-50	529
41/22	63,3	8	16	1,9	151	69	5	18	3,5	12-20	156

[1)] Product not available

HALFEN Serrated Anchor Channels HZA	Annex A6
Product description Dimensions of anchors	

Figure 1
Round Anchor

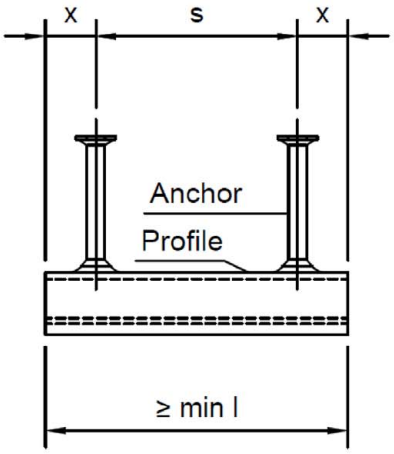

Figure 2
I-Anchor

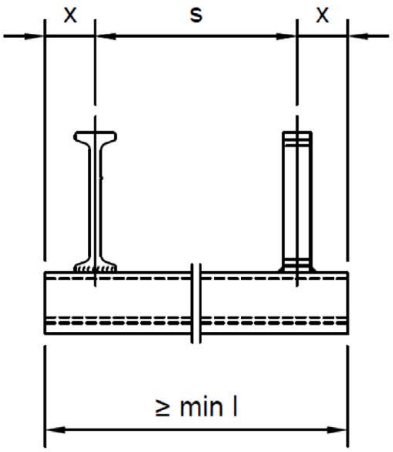

Table A4: Anchor positioning

Anchor channel HZA	Anchor spacing s		End spacing x		Min. Channel length l_{min}	
	s_{min}	s_{max}	Round Anchor Fig. 1	I-Anchor Fig. 2	Round Anchor Fig. 1	I-Anchor Fig. 2
	[mm]					
29/20	50	200	28[2)]	28[2)]	106	106
38/23	80	250	28[2)]	28[2)]	136	136
41/27	80	250	35	35	150	150
53/34	80	250	35	35	150	150
64/44	80	300[3)]	–[1)]	35	–[1)]	150
41/22	50	250	25[2)]	25[2)]	100	100

[1)] Product not available
[2)] The end spacing may be increased up to 35 mm
[3)] In case of fatigue cyclic tension load: s_{max} = 250 mm

HALFEN Serrated Anchor Channels HZA

Product description
Anchor positioning, channel length

Annex A7

HALFEN serrated channel bolts

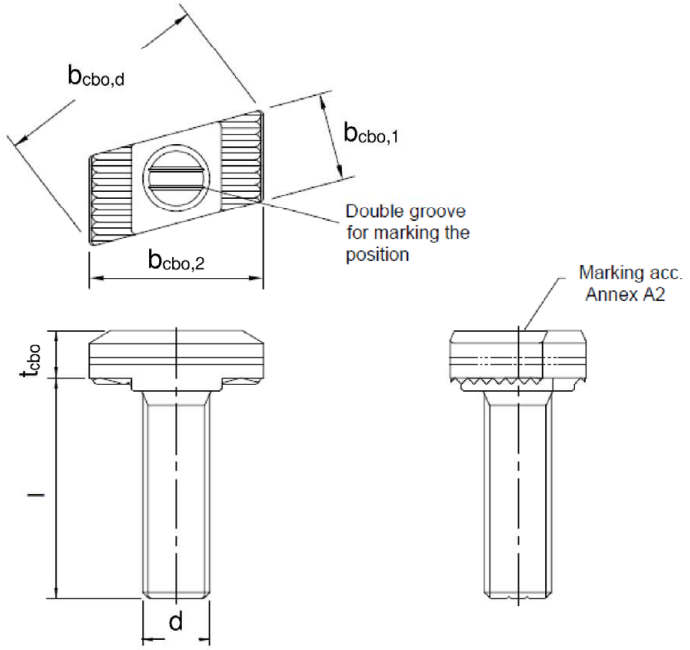

Table A5: Dimensions of HALFEN serrated channel bolts

Anchor channel HZA	Channel bolt HZS	Material	Thread diameter	Width $b_{cbo,1}$	Diagonal $b_{cbo,d}$	Length $b_{cbo,2}$	Thickness t_{cbo}
				[mm]			
29/20	HZS 29/20	8.8	M12	13,4	27,1	20,9	6,5
38/23 and 41/27	HZS 38/23	8.8 A4-70	M12	17,0	37,0	28,8	8,0
		8.8 A4-70	M16	17,0	37,0	28,8	8,0
53/34	HZS 53/34	8.8 A4-70	M16	21,0	51,6	41,6	11,5
		8.8 A4-70	M20	21,0	51,6	41,6	13,0
64/44	HZS 64/44	8.8 A4-70	M20	24,7	63,1	51,0	14,0
		8.8 A4-70	M24	24,7	63,1	51,0	16,0
41/22	HZS 41/22	8.8	M12	20,5	42,5	34,7	5,5
		A4-50	M12	20,5	42,5	34,7	7,5
		8.8 A4-50	M16	20,5	42,5	34,7	7,5

HALFEN Serrated Anchor Channels HZA

Product description
HALFEN serrated channel bolts, dimensions

Annex A8

Table A6: Strength grade

	Steel [1)]	Stainless steel [1)]	
Strength grade	8.8	50	70
f_{uk} [N/mm²]	800	500	700
f_{yk} [N/mm²]	640	210	450
Finish	Hot-dip galvanized	–	

[1)] Materials according Annex A2 and Annex A3-A4, Tab. A1

Specifications for intended use

Anchor channels and channel bolts subject to:

- Static and quasi-static tension, shear perpendicular to the longitudinal axis of the channel and shear in the direction of the longitudinal axis of the channel
- Fatigue cyclic tension for anchor channel/channel bolt according Annex C9, Table C11

Base materials:

- Reinforced or unreinforced normal weight concrete according to EN 206-1:2000.
- Strength classes C12/15 to C90/105 according to EN 206-1:2000.
- Cracked or uncracked concrete.

Use conditions (Environmental conditions):

- Structures subject to dry internal conditions
  (serrated anchor channels and serrated channel bolts according to Annex A3-A4, Table A1, column 1 - 5)
- Structures subject to internal conditions with usual humidity (e.g. kitchen, bath and laundry in residential buildings, exceptional permanent damp conditions and application under water)
  (serrated anchor channels and serrated channel bolts according to Annex A3-A4, Table A1, column 2 - 5)
- According to EN 1993-1-4:2006+A2:2015 relating to corrosion resistance class CRC III
  (serrated anchor channels and serrated channel bolts according to Annex A4, Table A1, column 3 - 5)
- According to EN 1993-1-4:2006+A2:2015 relating to corrosion resistance class CRC IV
  (serrated anchor channels and serrated channel bolts according to Annex A4, Table A1, column 4 - 5)
- According to EN 1993-1-4:2006+A2:2015 relating to corrosion resistance class CRC V
  (serrated anchor channels and serrated channel bolts according to Annex A4, Table A1, column 5)

Design:

- Anchor channels are designed under the responsibility of an engineer experienced in anchorages and concrete work.
- Verifiable calculation notes and drawings are prepared taking account of the loads to be anchored. The position of the serrated anchor channel and serrated channel bolts are indicated on the design drawings (e.g. position of the anchor channel relative to the reinforcement or to supports).
- For static and quasi-static loading the anchor channels are designed in accordance with EOTA TR 047 “Design of Anchor Channels”, March 2018 or EN 1992-4:2018.
- For fatigue loading the anchor channels are designed in accordance with EOTA TR 050 “Calculation Method for the Performance of Anchor Channels under Fatigue Loading”, June 2022.
- The characteristic resistances are calculated with the minimum effective embedment depth.

Installation:

- The installation of anchor channels is carried out by appropriately qualified personnel under the supervision of the person responsible for the technical matters on site.
- Use of the anchor channels only as supplied by the manufacturer – without any manipulations, repositioning or exchanging of channel components.
- Cutting of anchor channels is allowed only if pieces according to Annex A7, Table A4 are generated including end spacing and minimum channel length and only to be used in dry internal conditions (Annex A3, Table A1, column 1). For anchor channels made of stainless steel there are no restrictions regarding corrosion resistance when using cut channel pieces, if cutting is done professionally and contamination of cutting edges with corroding material is avoided.
- Installation in accordance with the installation instruction given in Annexes B6 and B7.
- The anchor channels are fixed on the formwork, reinforcement or auxiliary construction such that no movement of the anchor channels will occur during the time of laying the reinforcement and of placing and compacting the concrete.
- The concrete under the head of the anchors is properly compacted. The anchor channels are protected from penetration of concrete into the internal space of the channel profiles.
- Washer may be chosen according to Annex A3-A4 and provided separately by the user.
- Orientating the channel bolt (groove mark according to Annex B7) rectangular to the channel axis.
- The required installation torque given in Annex B4 must be applied and must not be exceeded.

Side view

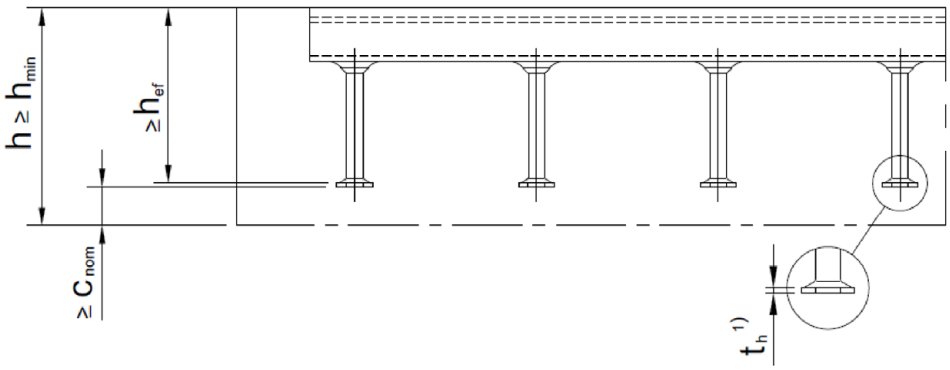

Plan view

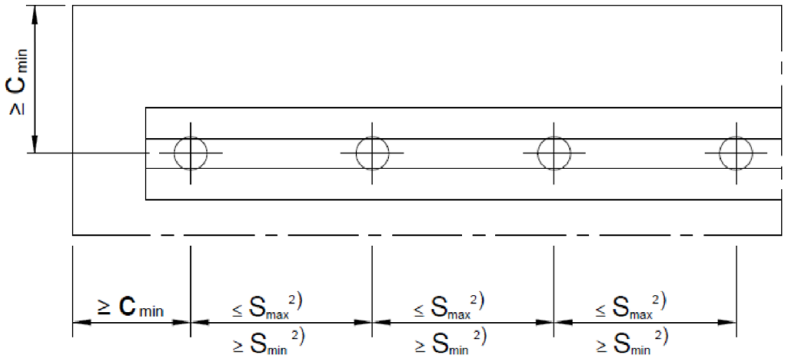

Table B1: Min. effective embedment depth, edge distance and thickness of concrete member

Serrated anchor channel HZA			29/20	38/23	41/27	53/34	64/44	41/22
Minimum effective embedment depth	[mm]	$h_{ef,min}$	82	94	148	155	178	82
Minimum edge distance	[mm]	c_{min}	50	75	75	100	125	50
Minimum thickness of concrete member	[mm]	h_{min}	$h_{ef} + t_h$ [1] $+ c_{nom}$ [3]					
			125	125	170	200	200	125

[1] t_h = Anchor head thickness
[2] s_{min}, s_{max} acc. to Annex A7, Tab. A4
[3] c_{nom} acc. to EN 1992-1-1 :2004 + AC 2010

HALFEN Serrated Anchor Channels HZA	Annex B3
Intended use Installation parameters of anchor channels	

Table B2: Minimum spacing and installation torque of HALFEN serrated channel bolts

Anchor channel HZA	HALFEN serrated channel bolts d	Min. spacing of the serrated channel bolts $s_{min,cbo}$	Installation torque T_{inst} [4]					
			General [2] $T_{inst,g}$			Steel-to-steel contact [3] $T_{inst,s}$		
			Steel 8.8[1]	Stainless steel		Steel 8.8[1]	Stainless steel	
				50[1]	70[1]		50[1]	70[1]
	[mm]		[Nm]					
29/20	12	60	35	–[5]	–[5]	75	–[5]	–[5]
38/23	12	60	55	–[5]	50	75	–[5]	50
	16	80	75	–[5]	75	185	–[5]	130
41/27	12	60	75	–[5]	–[5]	75	–[5]	–[5]
	16	80	125	–[5]	–[5]	185	–[5]	–[5]
53/34	16	80	135	–[5]	130	185	–[5]	130
	20	100	165	–[5]	165	360	–[5]	250
64/44	20	100	315	–[5]	250	360	–[5]	250
	24	120	375	–[5]	335	625	–[5]	435
41/22	12	60	30	20	–[5]	50	20	–[5]
	16	80	40	50	–[5]	140	50	–[5]

[1] Materials according to Annex A2 and Annex A3-A4, Tab. A1
[2] Acc. to Annex B5, Fig. 1
[3] Acc. to Annex B5, Fig. 2
[4] T_{inst} must not be exceeded
[5] Product not available

General

The fixture is in contact with the channel profile and the concrete surface.
The installation torque according to Annex B4, Table B2 shall be applied and must not be exceeded.

Fig. 1

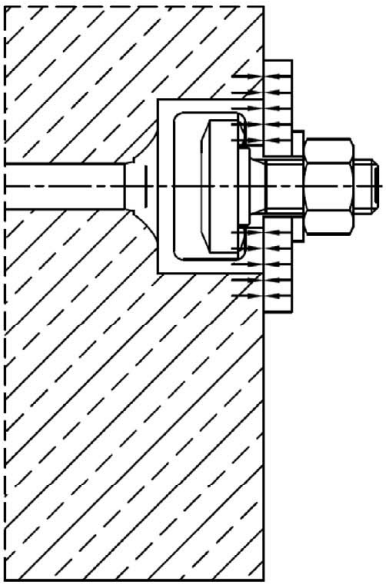

Steel-to-steel contact

The fixture is not in contact with the concrete surface. The fixture is fastened to the anchor channel by suitable steel parts (e.g. washer).
The installation torque according to Annex B4, Table B2 shall be applied and must not be exceeded.

Fig. 2

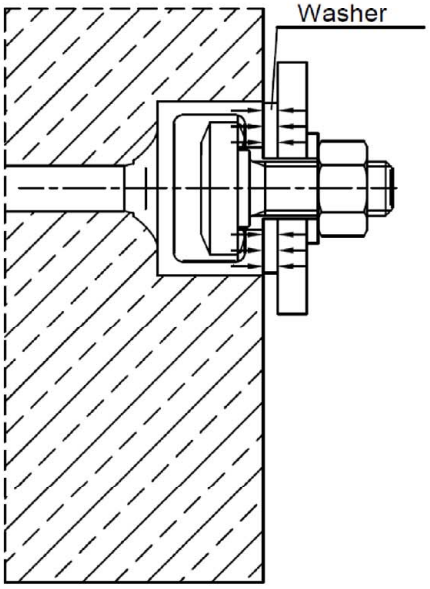

Installation of HALFEN anchor channel

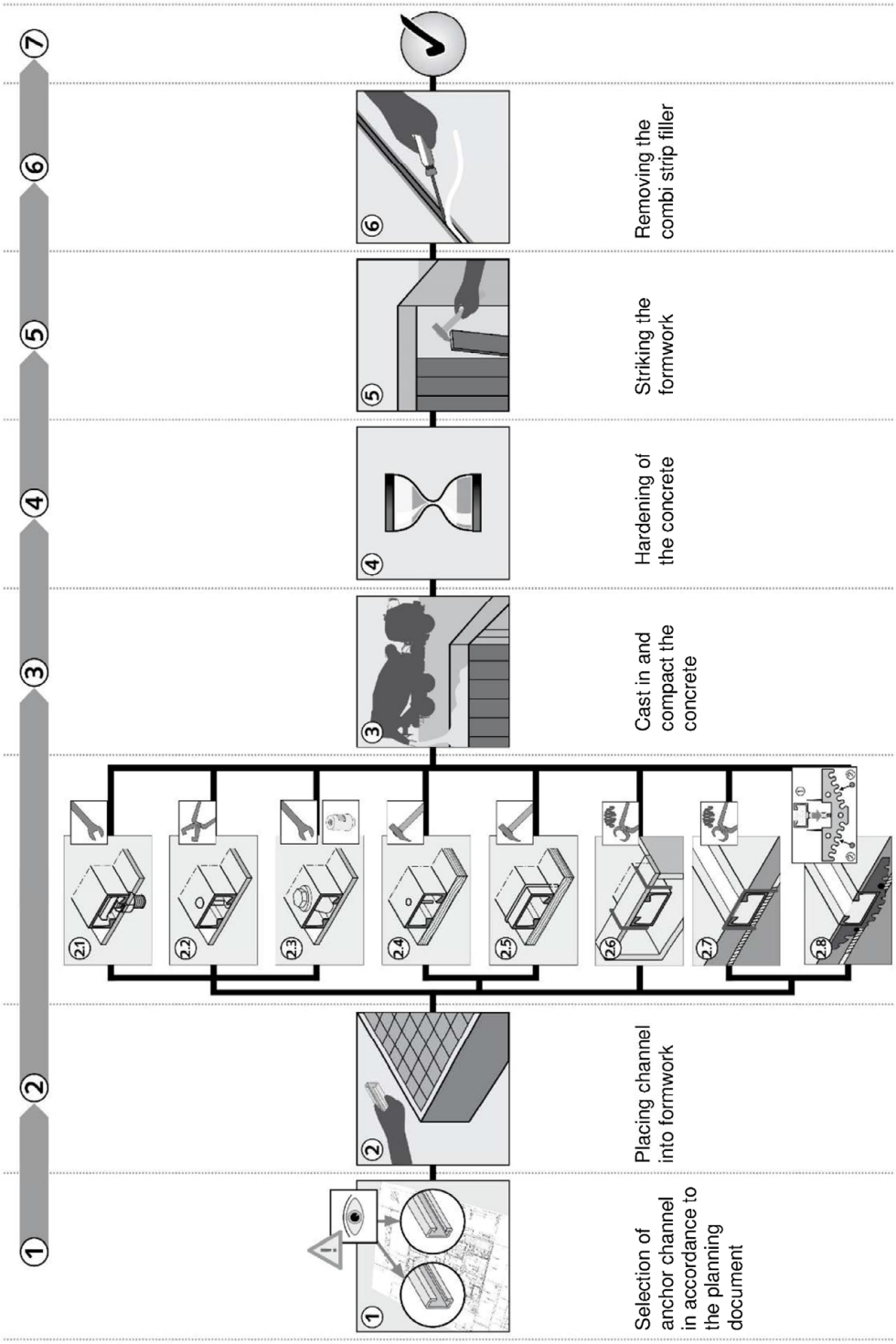

2.1 Steel formwork: Fixing with HALFEN serrated channel bolts through formwork penetration
2.2 Steel formwork: Fixing with rivets
2.3 Steel formwork: Fixing with HALFEN Fixing cone
2.4 Timber formwork: Fixing with nails
2.5 Timber formwork: Fixing with staples
2.6 Fixing in the top surface of concrete: Fixing by using auxiliary construction
2.7 Fixing in the top surface of concrete: Fixing from above directly to the reinforcement
2.8 Fixing in the top surface of concrete: Fixing from above to the reinforcement, using the HALFEN ChanClip

HALFEN Serrated Anchor Channels HZA	Annex B6
Intended use Installation instruction of HALFEN serrated anchor channel	

Installation of HALFEN serrated channel bolts

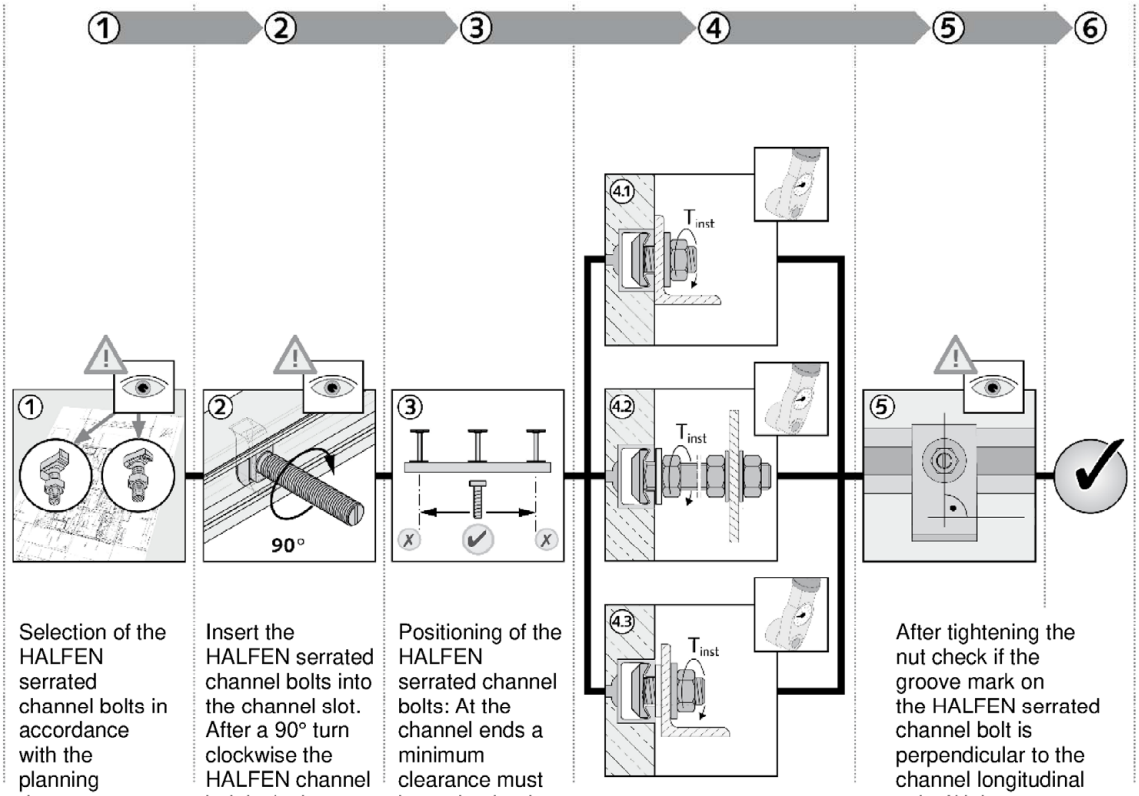

Selection of the HALFEN serrated channel bolts in accordance with the planning document.

Insert the HALFEN serrated channel bolts into the channel slot. After a 90° turn clockwise the HALFEN channel bolt locks into position (check whether the groove mark is perpendicular to the channel longitudinal axis).

Positioning of the HALFEN serrated channel bolts: At the channel ends a minimum clearance must be maintained, which corresponds with the overhang beyond the last anchor acc. to Annex A7.

Tighten the hexagonal nut to the installation torque (T_{inst}) acc. table stated below. T_{inst} must not be exceeded. 4.1: general application, 4.2 and 4.3: Steel-to-steel contact.

After tightening the nut check if the groove mark on the HALFEN serrated channel bolt is perpendicular to the channel longitudinal axis. If it is not perpendicular the channel bolt must be completely loosened, re-inserted and tightened again.

Table B3: Installation torque

Pos. of fixture acc. Annex B5	Material strength grade		Anchor channel HZA	T_{inst} [Nm] [1]					
				M12		M16		M20	M24
General	Steel 8.8 and (Stainless steel 50 / 70)		29/20	35		–[3]		–[3]	–[3]
			38/23	55 (50)		75 (75)		–[3]	–[3]
			41/27	75		125		–[3]	–[3]
			53/34	–[3]		135 (130)		165 (165)	–[3]
			64/44	–[3]		–[3]		315 (250)	375 (335)
			41/22	30 (20)		40 (50)		–[3]	–[3]
Steel-to-steel contact	Steel	8.8	All profiles	75	50 [2]	185	140 [2]	360	625
	Stainless steel	50		20		50		–[3]	–[3]
		70		50		130		250	435

[1] T_{inst} must not be exceeded
[2] Only for HZS 41/22 M12 8.8 and for HZS 41/22 M16 8.8
[3] Product not available

HALFEN Serrated Anchor Channels HZA	Annex B7
Intended use Installation instruction of HALFEN serrated channel bolts	

Table C1: Characteristic Resistances under tension load – steel failure anchor channel

Serrated anchor channel			**Steel**	**29/20**	**38/23**	**41/27**	**53/34**	**64/44**	**41/22**
Steel failure: Anchor									
Characteristic resistance	$N_{Rk,s,a}$	[kN]	carbon	20,1	31,4	54,0	56,5	100,0	20,1
			stainless	–[2]	31,4	–[2]	56,5	100,0	22,6
Partial factor	γ_{Ms} [1]		carbon	1,78	1,78	1,80	1,67	1,80	1,78
			stainless	–[2]		–[2]			1,80
Steel failure: Connection channel/anchor									
Characteristic resistance	$N_{Rk,s,c}$	[kN]	carbon	22,9	36,0	53,6	59,6	106,1	18,1
			stainless	–[2]	40,0	–[2]	55,0	94,4	26,1
Partial factor	$\gamma_{Ms,ca}$ [1]		1,8						
Steel failure: Local flexure of the channel lips									
Spacing of channel bolts for $N_{Rk,s,l}$	$s_{l,N}$	[mm]		58	76	80	105	128	83
Characteristic resistance	$N^0_{Rk,s,l}$	[kN]	carbon	22,9	39,3	53,6	82,5	106,1	18,1
			stainless	–[2]	40,0	–[2]	55,0	94,4	26,1
Partial factor	$\gamma_{Ms,l}$ [1]		1,8						

[1] In absence of other national regulations
[2] No performance assessed

Table C2: Characteristic flexural resistance of channel

Serrated Anchor channel			**Steel**	**29/20**	**38/23**	**41/27**	**53/34**	**64/44**	**41/22**
Steel failure: Flexure of channel									
Characteristic flexural resistance of channel	$M_{Rk,s,flex}$	[Nm]	carbon	873	1497	2289	3452	6935	733
			stainless	–[2]	1670	–[2]	3608	7922	749
Partial factor	$\gamma_{Ms,flex}$ [1]		1,15						

[1] In absence of other national regulations
[2] No performance assessed

Table C3: Characteristic resistance under tension load – steel failure of HALFEN serrated channel bolt

HALFEN serrated channel bolt thread diameter					**M12**	**M16**	**M20**	**M24**
Steel failure								
Characteristic resistance	$N_{Rk,s}$	[kN]	Carbon steel	8.8	67,4 (48,5)[1]	125,6 (96,3)[2]	196,0	282,4
			Stainless steel	50[3]	40,3	64,0	–[5]	–[5]
				70[3]	59,0	109,9	171,5	247,1
Partial factor	γ_{Ms} [4]		Carbon steel	8.8	1,50			
			Stainless steel	50[3]	2,86			
				70[3]	1,87			

[1] For HZS 41/22 M12 8.8
[2] For HZS 41/22 M16 8.8
[3] Materials according Annex A2, A3 and A4
[4] In absence of other national regulations
[5] No performance assessed

Table C4: Characteristic resistances under tension load – concrete failure

Serrated anchor channel				**29/20**	**38/23**	**41/27**	**53/34**	**64/44**	**41/22**
Concrete failure: Pull-out failure									
Characteristic resistance in cracked concrete C12/15	Round anchors	$N_{Rk,p}$	[kN]	13,6	21,2	34,0	34,0	–[2]	13,6
	I-anchors			14,0	19,8	24,8	29,7	47,6	14,0
Characteristic resistance in uncracked concrete C12/15	Round anchors	$N_{Rk,p}$	[kN]	19,0	29,7	47,6	47,6	–[2]	19,0
	I-anchors			19,7	27,7	34,7	41,6	66,6	19,7
Increasing factor for $N_{Rk,p}$ = $N_{Rk,p}$ (C12/15) · Ψ_c	C20/25	Ψ_c	[-]	1,67					
	C25/30			2,08					
	C30/37			2,50					
	C35/45			2,92					
	C40/50			3,33					
	C45/55			3,75					
	C50/60			4,17					
	C55/67			4,58					
	≥C60/75			5,00					
Partial factor		$\gamma_{Mp} = \gamma_{Mc}$ [1]		1,5					
Concrete failure: Concrete cone failure									
Product factor k_1		$k_{cr,N}$		7,9	8,1	8,6	8,7	8,9	7,9
		$k_{ucr,N}$		11,3	11,5	12,3	12,4	12,7	11,3
Partial factor		γ_{Mc} [1]		1,5					
Concrete failure: Splitting failure									
Characteristic edge spacing		$c_{cr,sp}$	[mm]	246	281	445	465	534	246
Characteristic spacing		$s_{cr,sp}$		492	562	890	930	1068	492
Partial factor		γ_{Msp} [1]		1,5					

[1] In absence of other national regulations
[2] No performance assessed

Table C5: Displacements under tension load

Serrated anchor channel			Steel	29/20	38/23	41/27	53/34	64/44	41/22
Tension load	N	[kN]	carbon	6,8	9,1	14,4	22,2	38,5	5,1
			stainless	–[1]	10,9	–[1]	21,8	37,4	8,5
Short-term displacement	δ_{N0}	[mm]	carbon	0,5	0,8	0,9	0,7	0,8	0,6
			stainless	–[1]	0,9	–[1]	0,7	0,7	1,0
Long-term displacement	$\delta_{N\infty}$	[mm]	carbon	0,9	1,7	1,8	1,4	1,7	1,3
			stainless	–[1]	1,8	–[1]	1,5	1,4	1,9

[1] No performance assessed

Table C6: Characteristic resistances under shear load – steel failure anchor channel

Serrated anchor channel			Steel	29/20	38/23	41/27	53/34	64/44	41/22
Steel failure: Anchor									
Characteristic resistance	$V_{Rk,s,a,y}$	[kN]	carbon	20,1	43,9	53,6	101,1	156,3	18,1
			stainless	–[2]	31,4	–[2]	55,0	94,4	22,6
	$V_{Rk,s,a,x}$	[kN]	carbon	12,0	18,8	32,4	33,9	62,8	12,0
			stainless	–[2]	18,8	–[2]	33,9	62,8	13,5
Partial factor	$\gamma_{Ms,a}$ [1]		carbon	1,48	1,48	1,50	1,39	1,50	1,48
			stainless	–[2]	1,48	–[2]	1,39	1,50	1,50
Steel failure: Connection channel/anchor									
Characteristic resistance	$V_{Rk,s,c,y}$	[kN]	carbon	20,1	43,9	53,6	101,1	156,3	18,1
			stainless	–[2]	31,4	–[2]	55,0	94,4	22,6
	$V_{Rk,s,c,x}$	[kN]	carbon	13,7	21,6	32,2	35,8	63,7	10,9
			stainless	–[2]	24,0	–[2]	33,0	56,6	15,7
Partial factor	$\gamma_{Ms,ca}$ [1]		1,8						
Steel failure: Local flexure of channel lips									
Spacing of channel bolts for $V_{Rk,s,l}$	$s_{l,V}$	[mm]		58	76	80	105	128	83
Characteristic resistance	$V^0_{Rk,s,l,y}$	[kN]	carbon	20,1	43,9	53,6	101,1	156,3	18,1
			stainless	–[2]	31,4	–[2]	55,0	94,4	22,6
Partial factor	$\gamma_{Ms,l}$ [1]		1,8						

[1] In absence of other national regulations
[2] No performance assessed

Table C6 (continued): Characteristic resistances under shear load – steel failure

Serrated anchor channel			**Steel**	**29/20**	**38/23**	**41/27**	**53/34**	**64/44**	**41/22**
Steel failure: Connection between channel lips and channel bolt in longitudinal channel axis									
Characteristic resistance	$V_{Rk,s,l,x}$ [kN]	M12	carbon	12,6	23,6	23,6	–[1]	–[1]	14,4
			stainless	–[1]	–[1]	–[1]	–[1]	–[1]	–[1]
		M16	carbon	–[1]	23,6	32,0	39,5	–[1]	14,4
			stainless	–[1]	24,9	–[1]	51,7	–[1]	14,2
		M20	carbon	–[1]	–[1]	–[1]	39,5	85,8	–[1]
			stainless	–[1]	–[1]	–[1]	51,7	68,8	–[1]
		M24	carbon	–[1]	–[1]	–[1]	–[1]	85,8	–[1]
			stainless	–[1]	–[1]	–[1]	–[1]	68,8	–[1]
Installation factor	γ_{inst}		carbon	1,0	1,2	1,2	1,2	1,2	1,2
			stainless	–[1]	1,2	–[1]	1,4	1,0	1,4

[1] No performance assessed

Table C7: Characteristic resistances under shear load – concrete failure

Serrated anchor channel			**29/20**	**38/23**	**41/27**	**53/34**	**64/44**	**41/22**
Concrete failure: Pry-out failure								
Product factor		k_8 [1]	2,0	2,0	2,0	2,0	2,0	2,0
Partial factor		γ_{Mc} [2]	1,5					
Concrete failure: Concrete edge failure								
Product factor k_{12}	cracked concrete	$k_{cr,V}$	6,1	7,5	7,5	7,5	7,5	6,5
	uncracked concrete	$k_{ucr,V}$	8,5	10,5	10,5	10,5	10,5	9,1
Partial factor		γ_{Mc} [2]	1,5					

[1] Without supplementary reinforcement. In case of supplementary reinforcement, the factor k_8 should be multiplied with 0,75.
[2] In absence of other national regulations

Table C8: Displacements under shear load

Serrated anchor channel			**Steel**	**29/20**	**38/23**	**41/27**	**53/34**	**64/44**	**41/22**
Shear load in y-direction [1]	V_y	[kN]	carbon	8,0	12,5	21,3	22,4	41,5	7,2
			stainless	–[3]	12,5	–[3]	21,8	37,5	9,0
Short-term displacement in y-direction	$\delta_{V,y,0}$	[mm]	carbon	0,9	1,8	0,9	1,4	1,6	0,6
			stainless	–[3]	2,3	–[3]	2,3	4,1	0,9
Long-term displacement in y-direction	$\delta_{V,y,\infty}$	[mm]	carbon	1,4	2,7	1,4	2,1	2,4	0,9
			stainless	–[3]	3,5	–[3]	3,4	6,2	1,4
Shear load in x-direction [2]	V_x	[kN]	carbon	5,0	7,8	10,5	13,0	28,3	4,7
			stainless	–[3]	8,2	–[3]	14,6	27,3	4,0
Short-term displacement in x-direction	$\delta_{V,x,0}$	[mm]	carbon	0,4	0,2	0,2	0,3	0,9	0,1
			stainless	–[3]	0,6	–[3]	0,5	0,9	0,2
Long-term displacement in x-direction	$\delta_{V,x,\infty}$	[mm]	carbon	0,6	0,3	0,3	0,5	1,4	0,2
			stainless	–[3]	0,9	–[3]	0,8	1,4	0,3

[1] y-direction (perpendicular to longitudinal axis of channel)
[2] x-direction (in the direction of longitudinal channel axis)
[3] No performance assessed

Table C9: Characteristic resistance under shear load – steel failure of HALFEN serrated channel bolt

HALFEN serrated channel bolt thread diameter					**M12**	**M16**	**M20**	**M24**
Steel failure								
Characteristic resistance	$V_{Rk,s}$	[kN]	steel	8.8	33,7	62,8	98,0	141,2
			Stainless steel	50[1)]	25,3	47,1	–[4)]	–[4)]
				70[1)]	35,4	65,9	102,9	148,3
Characteristic flexural resistance	$M^0_{Rk,s}$	[Nm]	steel	8.8	105	266[2)]	519	898
			Stainless steel	50[1)]	66	167	–[4)]	–[4)]
				70[1)]	92	233	454	786
Partial factor	γ_{Ms} [3)]		steel	8.8	1,25			
			Stainless steel	50[1)]	2,38			
				70[1)]	1,56			

[1)] Materials according Annex A2 and A3-A4
[2)] For HZS 41/22 M16 8.8, $M^0_{Rk,s}$ is limited to 261 Nm.
[3)] In absence of other national regulations
[4)] No performance assessed

Table C10: Characteristic resistance under combined tension and shear load

Serrated anchor channel		**29/20**	**38/23**	**41/27**	**53/34**	**64/44**	**41/22**
Steel failure: Local failure by flexure of channel lips and failure by flexure of channel							
Product factor	k_{13}	Values according to EN 1992-4:2018, Section 7.4.3.1					
Steel failure: Failure of anchor and connection between anchor and channel							
Product factor	k_{14}	Values according to EN 1992-4:2018, Section 7.4.3.1					

For Design Method I or II for test method C according to EOTA TR 050, June 2022

Table C11: Combinations of anchor channels and channel bolts under fatigue tension load

Anchor channel		Channel bolts		
HZA	Anchor type	Channel bolt	Thread diameter [mm]	Material
38/23	round anchor	HZS 38/23	M16	Steel 8.8, electroplated, hot-dip galv.
41/27				
53/34	round anchor + I-anchor	HZS 53/34	M20	
64/44	I-anchor	HZS 64/44	M24	

Table C12: Characteristic fatigue resistances $\Delta N_{Rk,s,lo,n}$ with lower load $N_{lok,s,n}$ – Steel failure

Anchor channel	HZA	38/23		41/27		53/34		64/44	
Characteristic resistances under fatigue tension load	Load cycles n	$\Delta N_{Rk,s,lo,n}$ [kN]	$N_{lok,s,n}$ [kN]	$\Delta N_{Rk,s,lo,n}$ [kN]	$N_{lok,s,n}$ [kN]	$\Delta N_{Rk,s,lo,n}$ [kN]	$N_{lok,s,n}$ [kN]	$\Delta N_{Rk,s,lo,n}$ [kN]	$N_{lok,s,n}$ [kN]
	$\leq 10^4$	16,0	0,0	16,0	0,0	30,0	0,0	55,0	0,0
	$2 \cdot 10^4$	16,0	0,0	16,0	0,0	29,0	0,0	45,2	0,0
	$5 \cdot 10^4$	13,3	2,5	13,3	2,5	22,5	3,0	34,6	9,4
	$1 \cdot 10^5$	10,9	4,9	10,9	4,9	18,5	6,7	28,3	16,9
	$2 \cdot 10^5$	8,9	6,9	8,9	6,9	15,2	9,7	23,1	23,0
	$5 \cdot 10^5$	6,9	9,0	6,9	9,0	11,8	12,9	17,7	29,4
	$1 \cdot 10^6$	5,6	10,2	5,6	10,2	9,7	14,9	14,5	33,2
	$2 \cdot 10^6$	4,6	11,2	4,6	11,2	8,0	16,5	11,8	36,4
	$5 \cdot 10^6$	3,5	12,3	3,5	12,3	6,2	18,1	9,1	39,6
	$1 \cdot 10^7$	3,5	12,3	3,5	12,3	6,2	18,1	7,4	41,6
	$5 \cdot 10^7$	3,5	12,3	3,5	12,3	6,2	18,1	4,6	44,9
	$\geq 10^8$	3,5	12,3	3,5	12,3	6,2	18,1	3,8	45,9

Table C13: Characteristic resistances under fatigue tension load after n load cycles with static preload N_{Elok} – Concrete failure

Pull-out and concrete cone failure:
Reduction factor for pull-out and concrete cone failure

	Load cycles n	$\eta_{k,c,fat} = \eta_{k,p,fat}$ [-]								
		S_{lok} =								
		0,0	0,1	0,2	0,3	0,4	0,5	0,6	0,7	0,8
Reduction factor for $\Delta N_{Rk,c,E,n} = \eta_{k,c,fat} \cdot N_{Rk,c}$ [1)] $\Delta N_{Rk,p,E,n} = \eta_{k,p,fat} \cdot N_{Rk,p}$ [2)] $S_{lok} = 2{,}25 \cdot N_{Elok}/N_{Rk,c(p)} \leq 0{,}8$ [3)]	$\leq 10^4$	0,725	0,668	0,600	0,527	0,450	0,370	0,288	0,205	0,120
	$2 \cdot 10^4$	0,704	0,650	0,585	0,514	0,439	0,360	0,279	0,197	0,114
	$5 \cdot 10^4$	0,677	0,627	0,566	0,497	0,424	0,347	0,268	0,188	0,106
	$1 \cdot 10^5$	0,656	0,610	0,551	0,484	0,412	0,337	0,260	0,181	0,100
	$2 \cdot 10^5$	0,636	0,592	0,536	0,471	0,401	0,328	0,251	0,174	0,094
	$5 \cdot 10^5$	0,608	0,569	0,516	0,454	0,386	0,315	0,240	0,164	0,087
	$1 \cdot 10^6$	0,588	0,551	0,501	0,441	0,375	0,305	0,232	0,157	0,081
	$2 \cdot 10^6$	0,567	0,534	0,486	0,428	0,364	0,295	0,223	0,150	0,075
	$5 \cdot 10^6$	0,539	0,511	0,466	0,411	0,349	0,282	0,212	0,140	0,067
	$1 \cdot 10^7$	0,519	0,493	0,451	0,398	0,337	0,272	0,204	0,133	0,061
	$2 \cdot 10^7$	0,498	0,476	0,436	0,385	0,326	0,262	0,195	0,126	0,055
	$5 \cdot 10^7$	0,471	0,453	0,416	0,367	0,311	0,250	0,184	0,116	0,047
	$\geq 10^8$	0,450	0,435	0,401	0,354	0,300	0,240	0,176	0,109	0,041

1) $N_{Rk,c}$ static resistance according to Annex C3 and EOTA TR 047, March 2018 or EN 1992-4:2018
2) $N_{Rk,p}$ static resistance according to Annex C3
3) N_{Elok} characteristic value of the static pre-load decisive for concrete cone or pull-out failure

In absence of other national regulations the following partial factors $\gamma_{M,fat}$ are recommended for design method I and II according to EOTA TR 050, June 2022 for test method C.

$\gamma_{Ms,fat}$ = 1,35 (steel)
$\gamma_{Mc,fat} = \gamma_{Mp,fat}$ = 1,5 (concrete)

Leviat®
A CRH COMPANY

For more information on the products featured here, please contact Leviat:

Australia
Leviat
98 Kurrajong Avenue,
Mount Druitt, Sydney, NSW 2770
Tel: +61 - 2 8808 3100
Email: info.au@leviat.com

Austria
Leviat
Leonard-Bernstein-Str. 10
Saturn Tower, 1220 Wien
Tel: +43 - 1 - 259 6770
Email: info.at@leviat.com

Belgium
Leviat
Industrielaan 2
1740 Ternat
Tel: +32 - 2 - 582 29 45
Email: info.be@leviat.com

China
Leviat
Room 601 Tower D, Vantone Centre
No. A6 Chao Yang Men Wai Street
Chaoyang District
Beijing · P.R. China 100020
Tel: +86 - 10 5907 3200
Email: info.cn@leviat.com

Czech Republic
Leviat
Business Center Šafránkova
Šafránkova 1238/1
155 00 Praha 5
Tel: +420 - 311 - 690 060
Email: info.cz@leviat.com

Finland
Leviat
Vädursgatan 5
412 50 Göteborg / Sweden
Tel: +358 (0)10 6338781
Email: info.fi@leviat.com

France
Leviat
6, Rue de Cabanis
FR 31240 L'Union
Toulouse
Tel: +33 - 5 - 34 25 54 82
Email: info.fr@leviat.com

Germany
Leviat
Liebigstrasse 14
40764 Langenfeld
Tel: +49 - 2173 - 970 - 0
Email: info.de@leviat.com

India
Leviat
309, 3rd Floor, Orion Business Park
Ghodbunder Road, Kapurbawdi,
Thane West, Thane,
Maharashtra 400607
Tel: +91 - 22 2589 2032
Email: info.in@leviat.com

Italy
Leviat
Via F.lli Bronzetti 28
24124 Bergamo
Tel: +39 - 035 - 0760711
Email: info.it@leviat.com

Malaysia
Leviat
28 Jalan Anggerik Mokara 31/59
Kota Kemuning, 40460 Shah Alam
Selangor
Tel: +603 - 5122 4182
Email: info.my@leviat.com

Netherlands
Leviat
Oostermaat 3
7623 CS Borne
Tel: +31 - 74 - 267 14 49
Email: info.nl@leviat.com

New Zealand
Leviat
2/19 Nuttall Drive, Hillsborough,
Christchurch 8022
Tel: +64 - 3 376 5205
Email: info.nz@leviat.com

Norway
Leviat
Vestre Svanholmen 5
4313 Sandnes
Tel: +47 - 51 82 34 00
Email: info.no@leviat.com

Philippines
Leviat
2933 Regus, Joy Nostalg,
ADB Avenue
Ortigas Center
Pasig City
Tel: +63 - 2 7957 6381
Email: info.ph@leviat.com

Poland
Leviat
Ul. Obornicka 287
60-691 Poznań
Tel: +48 - 61 - 622 14 14
Email: info.pl@leviat.com

Singapore
Leviat
14 Benoi Crescent
Singapore 629977
Tel: +65 - 6266 6802
Email: info.sg@leviat.com

Spain
Leviat
Polígono Industrial Santa Ana
c/ Ignacio Zuloaga, 20
28522 Rivas-Vaciamadrid
Tel: +34 - 91 632 18 40
Email: info.es@leviat.com

Sweden
Leviat
Vädursgatan 5
412 50 Göteborg
Tel: +46 - 31 - 98 58 00
Email: info.se@leviat.com

Switzerland
Leviat
Grenzstrasse 24
3250 Lyss
Tel: +41 (0)800 22 66 00
Email: info.ch@leviat.com

United Arab Emirates
Leviat
RA08 TB02, PO Box 17225
JAFZA, Jebel Ali, Dubai
Tel: +971 (0)4 883 4346
Email: info.ae@leviat.com

United Kingdom
Leviat
President Way, President Park,
Sheffield, S4 7UR
Tel: +44 - 114 275 5224
Email: info.uk@leviat.com

USA / Canada
Leviat
6467 S Falkenburg Road
Riverview, FL 33578
Tel: (800) 423-9140
Email: info.us@leviat.us

For countries not listed
Email: info@leviat.com

Leviat.com

© 2022
B-271-E
PDF 08/22

Imagine. Model. Make.