FACE

Innovative automation

Sliding doors **SL5** series

with Brushless motors in direct drive and power supply in extended range 100-240 V (50/60 Hz) Switch Mode Tecnology

the first real energy saving automations that guarantee a reduction in the consumption of electricity equal to 54%

“nothing like before”

Comparison
electricity consumption

COMPETITORS

Automation surveys carried out on sliding doors with two wings
transit space 1400 – operator lenght 3000 – weight kg 50 x 2

one cycle = opening + closing

Macro technical data

CC motor gearbox with switching brushes
Power supply 230 V / 50-60 Hz

Rated Power = 230 W
Stand-by = 32 W

Consumption

Daily 1.500 cycles = **0,84 kWh**
Annual 547.500 cycles = **306,60 kWh**

Comparison
electricity consumption

FACE

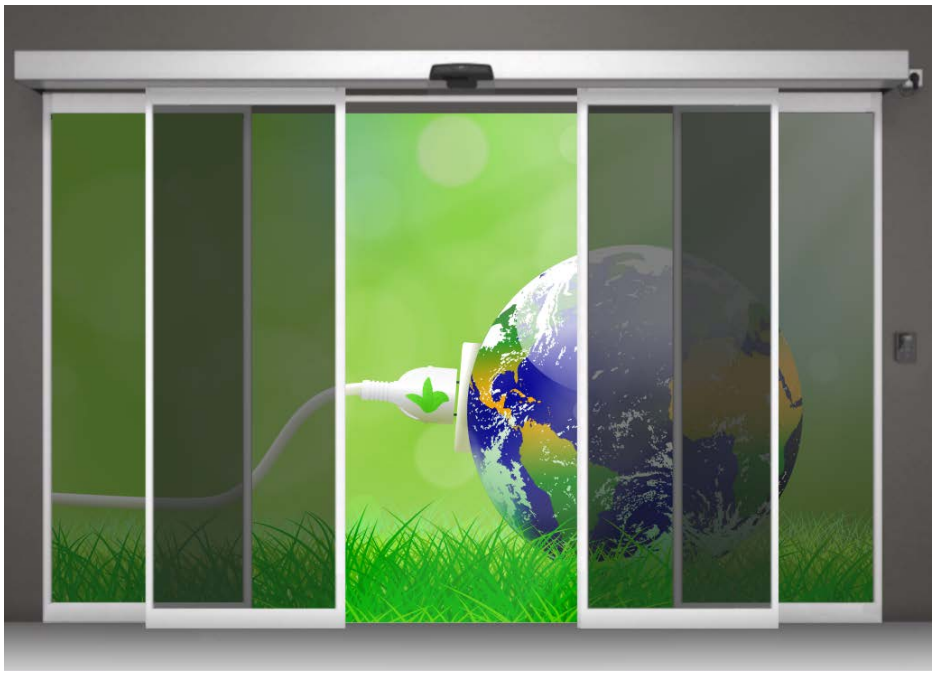

Automation surveys carried out on sliding doors with two wings
transit space 1400 – operator length 3000 – weight kg 50 x 2

Macro technical data

Direct drive Brushless motor

Extended range power Supply 100-240 V / 50-60 Hz

Switch Mode Technology

Rated Power = 70 W

Stand-by = 10 W

Consumption

Daily 1.500 cycles	=	**0,39 kWh**
Annual 547.500 cycles	=	**142,35 kWh**
Annual saving	=	**164,25 kWh**

SAVING = 54 %

INNOVATIVE TECHNOLOGICAL CONTENTS

The **traction unit** has the following main features:
-Use of direct drive Brushless motor of its own design , in replacement of traditional DC motor with switching brushes , to increase the efficiency (+30% efficiency of the brushless motor and +30% efficiency from the elimination of the gearbox) and reduce the electricity consumption.
-The main element of usury in a DC motor are brushes, being by definition the Brushless motor without brushes, and also turning low speed, 200 rpm because direct, it's operational life is longer about ten times and the maintenance more than halved and limited to the external parts of the motor.
Having also removed the gearbox, are also delete the maintenance costs due to it's natural wear.
-The absence of brushes makes these motors exceptionally quiet, and the elimination of the gearbox enhances more the result.
-The exclusive and patented positioning hall sensor inside the engine, making it very compact in size and functionality, protected from accidental breakage caused by inadvertent clumsy external actions.

Direct Brushless Motor

The **advanced electronic** control of its own design , has the following main features:
-The power supply is an extended range 100-240 Vac (50/60 Hz), made with Switch Mode technology, which guarantees highest efficiency and reduces energy consumption of the entire automation.
-The power supply connection is a standard cable plug, doesn't required installation by specilized personnel.
-Adjustment by an alphanumeric display, easily readable even at distance, and can provide diagnostic and detailed information.
-The electronic control is already preset in standard mode, you don't need to make any adjustment, your door is already working. However, all parameters are editable, we want to meet your specific needs.
-Dedicated terminal are present to each accessory, allowing an easy and simple connection of the control devices and door security.
-All the information collected during the operation of the door, and above all control settings, are saved on a micro SD memory easily available, so that you can replicate to similar applications, and reuse when replacing, reducing intervention time. The micro SD memory can also be used to upgrade the system, so you always benefit the latest innovations functionality of the door.
-The electronic control is provided with standard micro USB for connection to the personal computer, in order to perform more sophisticated diagnostics, update and control.

Electronic Control

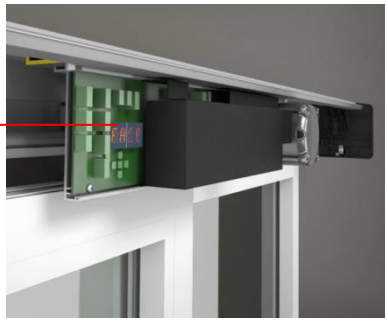

The **mechanical scroll** has the following main features:
-The fixing system to wall/beam of the support bracket, on which it will be simply hooked the entire length of the motor drive without any additional fixing for drilling/tessellation, enables a single person to install an automation until a 4 m, reducing installation costs by 50%.

Support Bracket Motor Drive

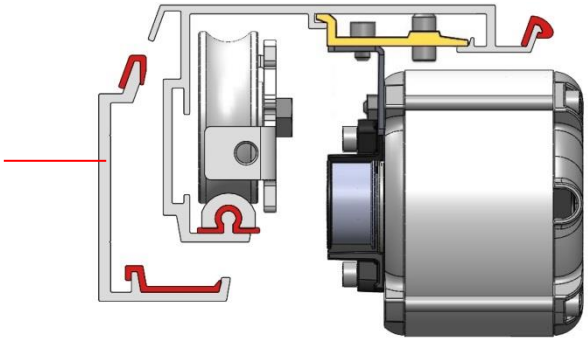

-An exclusive cushioning system in 3 stages, obtained by interposing shockabsorbing gaskets between the support profile (1) and the drive unit profile (2), and between the scroll carriage profile (3), allows to eliminate vibrations to the structure where the system is fixed.
This cushioning system and elimination of the transmission of vibrations allows to obtain a high level of quiet operation never reached before, which is the main feature of applications that require a high level of noiseless.

Cushioning system in 3 stages:
1 – Support Profile
2 – Drive Unit Profile
3 – Scroll Carriage Profile

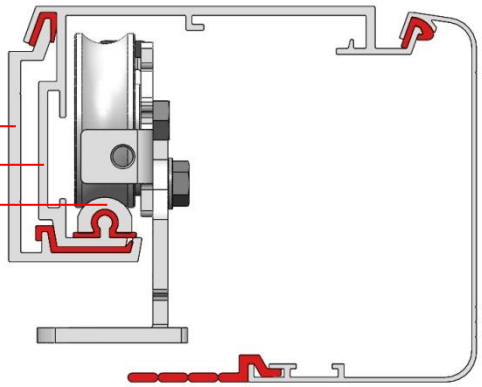

-The fixing system for snap-front of all internal elements automation, allows a quick and easy replacement, any operation is also facilitated by the fact that in all automation are only used 3 different types of screws that require to have included only one type of key combination, only one type of Allen key T and a single type of screwdriver.

Push fit front

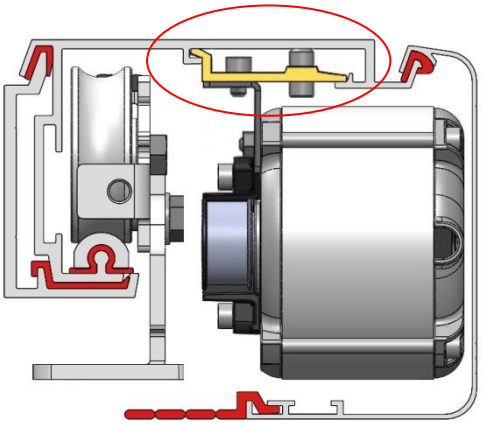

Section dimensions and adjustment doors attacks

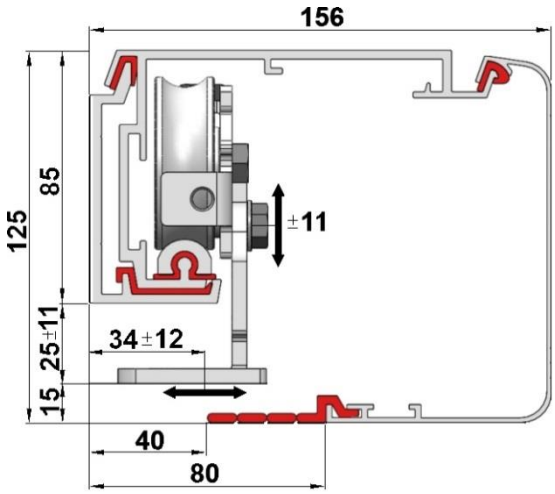

TECHNICAL SPECIFICATIONS

Series	**SL5A**	**SL5E**	**SL5H**
Model	**ADVANCED**	**EMERGENCY**	**HEAVY**
Use	Automatic sliding doors	Automatic sliding doors	Automatic sliding doors
Special application	Escape routes with breakthrough	Escape routes with breakthrough	Heavy doors
Certification EN 16005	TÜV THÜRINGEN + DIN 18650	TÜV THÜRINGEN + DIN 18650	
Certification EN 16005	Prima Ricerca & Sviluppo	Prima Ricerca & Sviluppo	Prima Ricerca & Sviluppo
Product dimensions	156 x 125 x max 6600	156 x 125 x max 6600	125 x 156 x max 6600
Maximum capacity	140 one door - 240 two doors	140 one door - 240 two doors	180 one door - 300 two doors
Maximum opening and closing speed	0,8 m/s one door 1,6 m/s two doors	0,8 m/s one door 1,6 m/s two doors	0,6 m/s one door 1,2 m/s two doors
Duty class	Continuous operation	Continuous operation	Continuous operation
Intermittent	S3 = 100%	S3 = 100%	S3 = 60%
Traction	Direct Brushless Motor	Double winding Direct Brushless Motor	Direct Brushless Motor
Power supply	Extended range 100–240 V 50/60 Hz	Extended range 100–240 V 50/60 Hz	Extended range 100–240 V 50/60 Hz
Rated power	70 W	70 W	70 W
Stand-by	10 W	10 W	10 W
Rated load	80 N	80 N	80 N
Protecting rating	IP 20	IP 20	IP 20
Parameter Settings	Buttons and Display	Buttons and Display	Buttons and Display
Memory	Micro SD standard	Micro SD standard	Micro SD standard
PC connection	Micro USB standard	Micro USB standard	Micro USB standard

INDIPENDENT ON-OFF HOOK MAGNETIC SENSORS SYSTEM SUPPORT

The unique sensors system support, allows you to remove and put the automation cover (also with magnetic coupling) very rapidly due to the elimination of the mounting and wiring sensors directly onto the cover, reducing access times to automation.

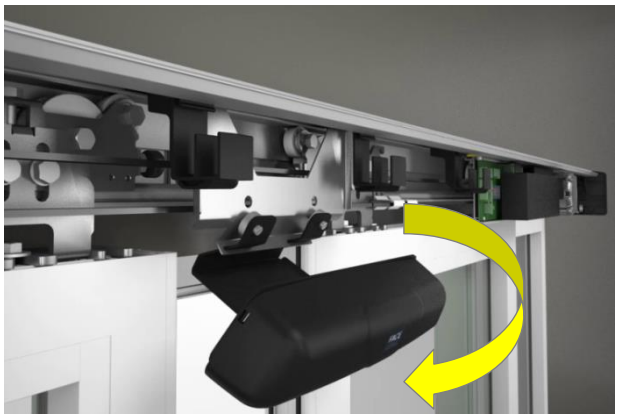

FUNCTION SELECTOR WITH ELECTRONIC KEY TRANSPONDER

This innovative device has a capacitive touchscreen display for an easy and intuitive use, the backlight LED ensures high visibility settings even in adverse lighting conditions. The glass front panel, is pleasantly "clean" to view and adequately resistant for use in all conditions.

The simplified use authorization is on three levels, choose from:
1° - Always On.
2° - Activated by a simple touch on the FACE logo 3 seconds.
3° - Badge contactless, without use of "mechanical" keys.

The device is also arranged to interact directly with the NFC enabled smartphone in substitution of badges.

Innovate to simplify

CE MARKING AND EUROPEAN STANDARD EN 16005

FACE automations are CE-marked designed and built in compliance with the European standard safety requirements EN 16005 and the following European directives: Machinery Directive (2006/42/EC), Electromagnetic Compatibility Directive (2014/30/UE).

To make the system, use accessories and safety devices approved by FACE.

FACE reserves the right to make changes and improvements of their products. For this reason, the illustrations and the information appearing in this document are not definitive.

This edition of the document cancels and replaces all previous versions. In case of modification will be issued a new edition.

More information is available on-line technical manuals www.facespa.it.

Quality system certificate Nr. 50 100 12734

FACE S.p.A.
Viale delle Industrie, 74 - 31030 Dosson di Casier (TV) – Italy
Fax +39 0422 380414 \ Phone +39 0422 492730
E-mail: info@facespa.it \ www.facespa.it