OLDA 26 HZ - automatic flush bolt - drawing

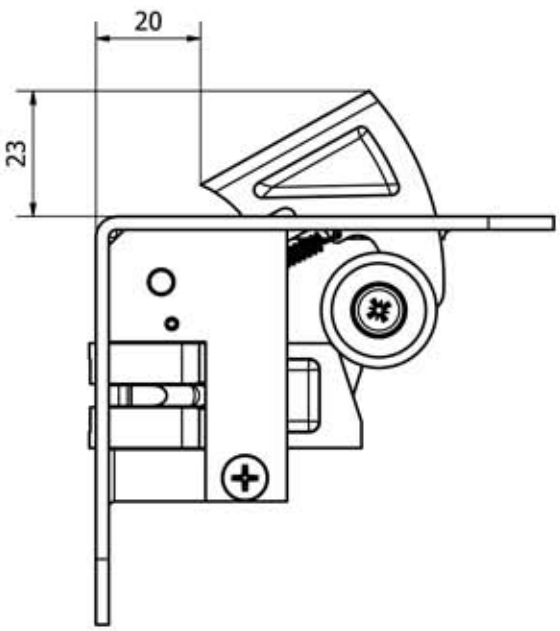

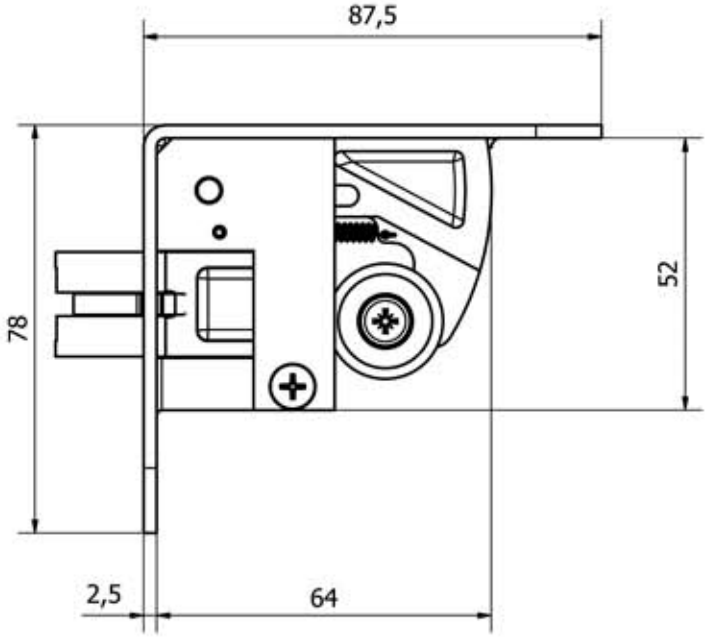

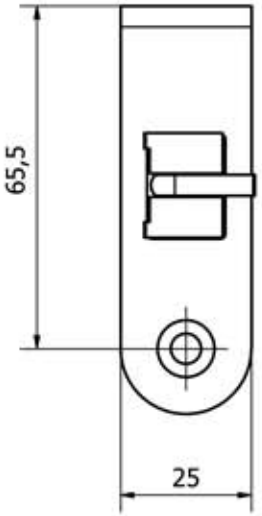

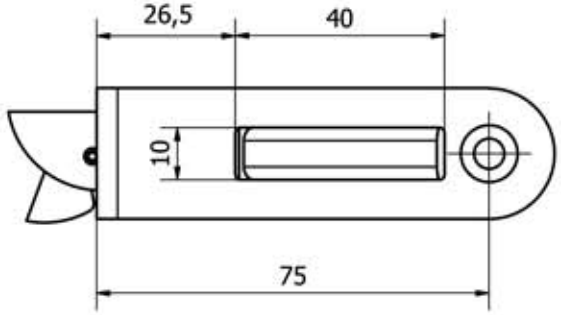

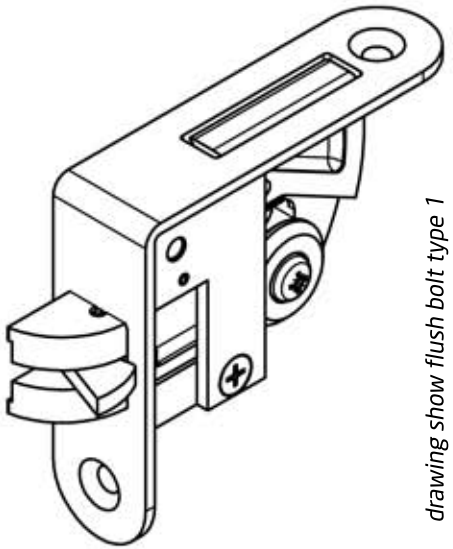

drawing show flush bolt type 1

CAD26HZ	A	2019-02-07