OLDA 100 HZA - automatic flush bolt

mounting guide: internal fitting

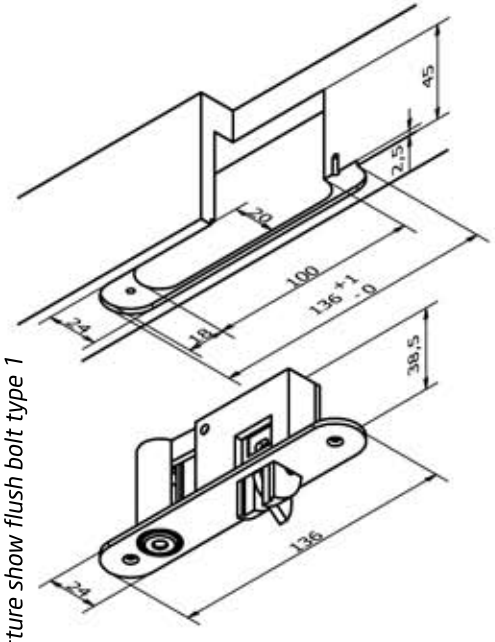

picture show flush bolt type 1

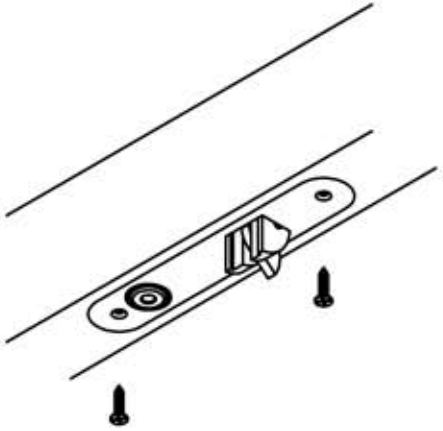

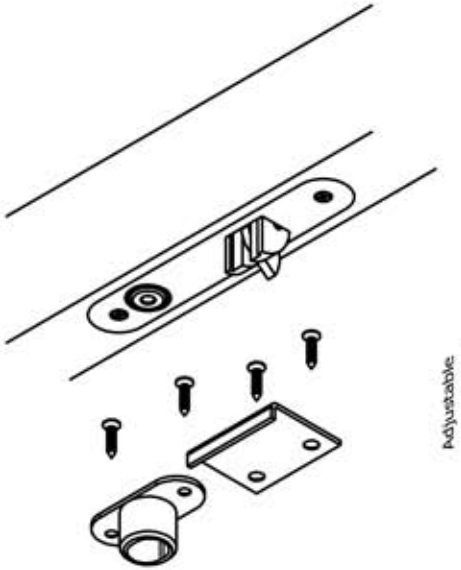

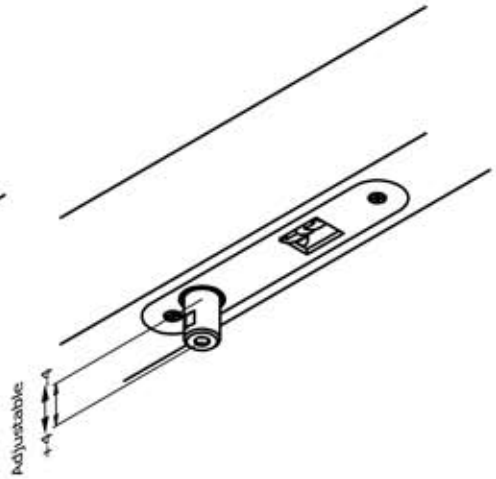

Check function of flush bolt, including accessories, in the door !

Adjust the height position of the bolt if necessary:

* release internal set screw
* adjust height by turning bolt
* lock set screw

Service instruction:

* test function 1-2 times per year**
* lubricate
* and if necessary/possible adjust movable parts

*** High frequency doors or demanding environments may require more frequent service.*

change of type (direction) :

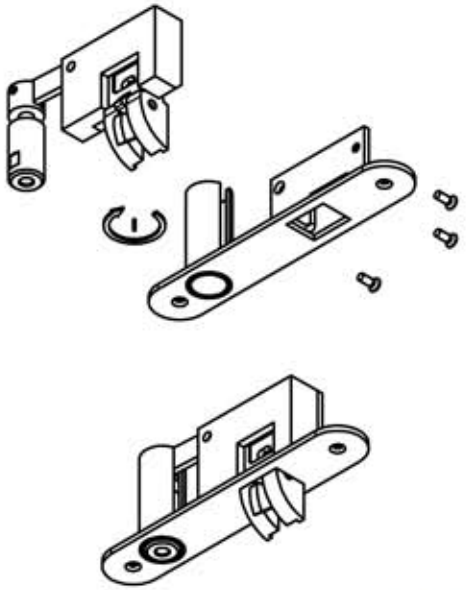

contents:

flush bolt
strike plate
lock tube
screws

www.olda.com

OLDA® INNOVATION AB
ISO 9001:2015 & ISO 14001:2015 certified part of the ÅZ Gruppen

art.no: type 1 : 471014100-1
type 2 : 471014100-2

MA100HZA(1)	A	2019-01-29

v 1.1

OLDA 100 HZA - automatic flush bolt

mounting guide: external fitting

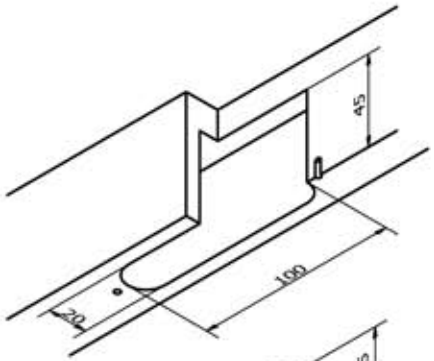

picture show flush bolt type 1

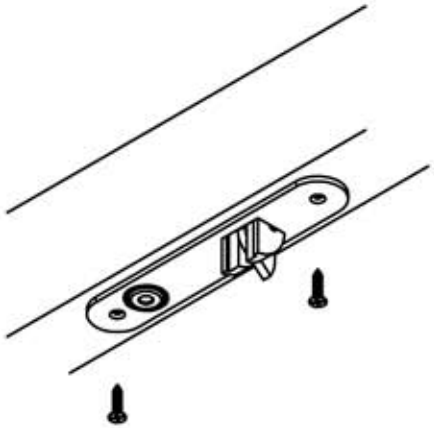

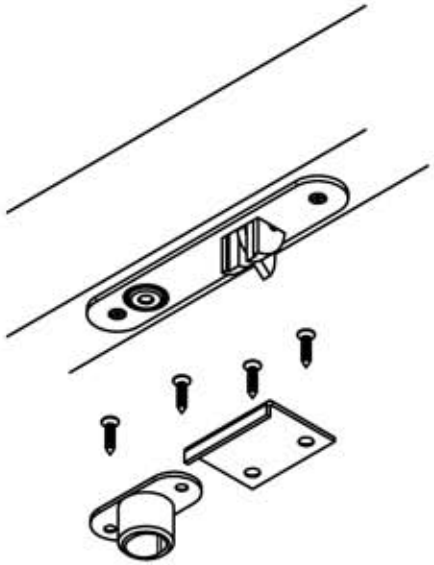

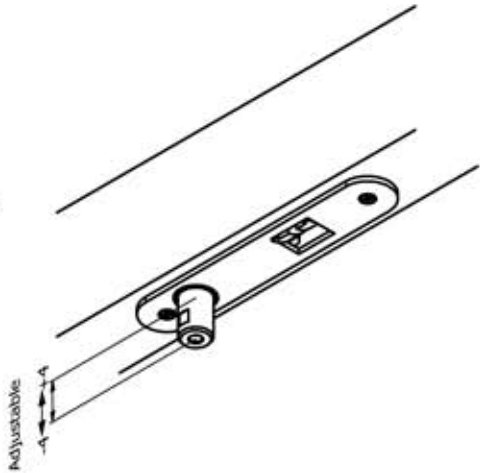

Check function of flush bolt, including accessories, in the door !

Adjust the height position of the bolt if necessary:

* release internal set screw
* adjust height by turning bolt
* lock set screw

Service instruction:

* test function 1-2 times per year**
* lubricate
* and if necessary/possible adjust movable parts

*** High frequency doors or demanding environments may require more frequent service.*

change of type (direction) :

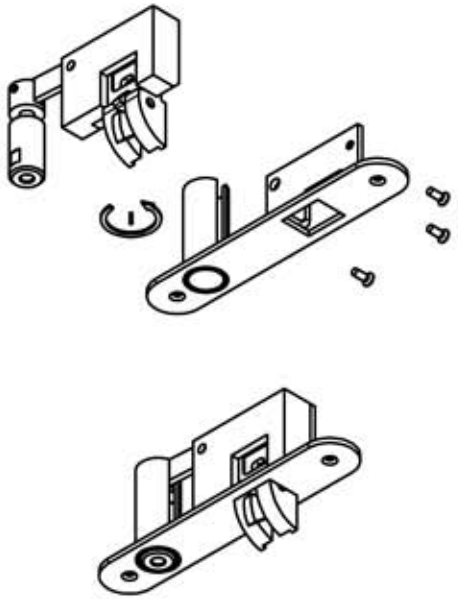

contents:

flush bolt
strike plate
lock tube
screws

www.olda.com

OLDA® INNOVATION AB
ISO 9001:2015 & ISO 14001:2015 certified part of the Gruppen

art.no: type 1 : 471014100-1
type 2 : 471014100-2

MA100HZA(2)	A	2019-01-29

v 1.1